Atrio 25 049

Roman tub filler with hand shower

Description

8 3/4" spout
5-hole installation
Sena hand shower
79" hand shower hose
Ceramic cartridges
3/4" copper connections

Sold less handles. Shown with both Trio spoke handles (18 033) and lever handles (18 034).

Flow Rate

12.6 gpm at 45 psi

Code Compliance

* ASME/ANSI A112.18.M
* ADA Compliant

Finish Options

25 049 OOO Chrome
25 049 AVO Infinity Satin Nickel
25 049 BEO Sterling Infinity Finish
25 049 ENO Infinity Brushed Nickel

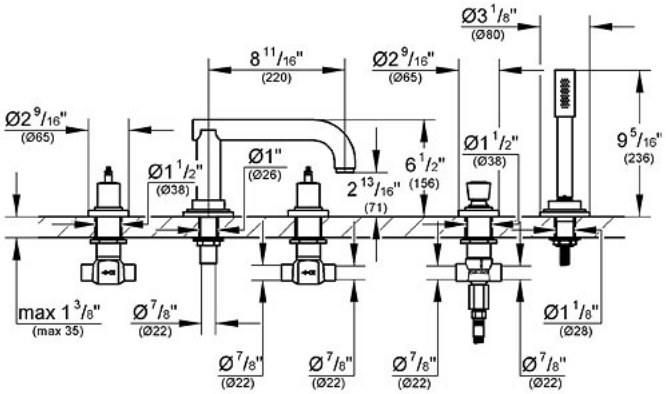

GROHE AMERICA, INC.241 COVINGTON DRIVE, BLOOMINGDALE, IL 60108 . 630-582-7711.FAX:630-582-7722